www.amquartz.com

REVISIONS				
ZONE	REV	DESCRIPTION	Date	APPROVED

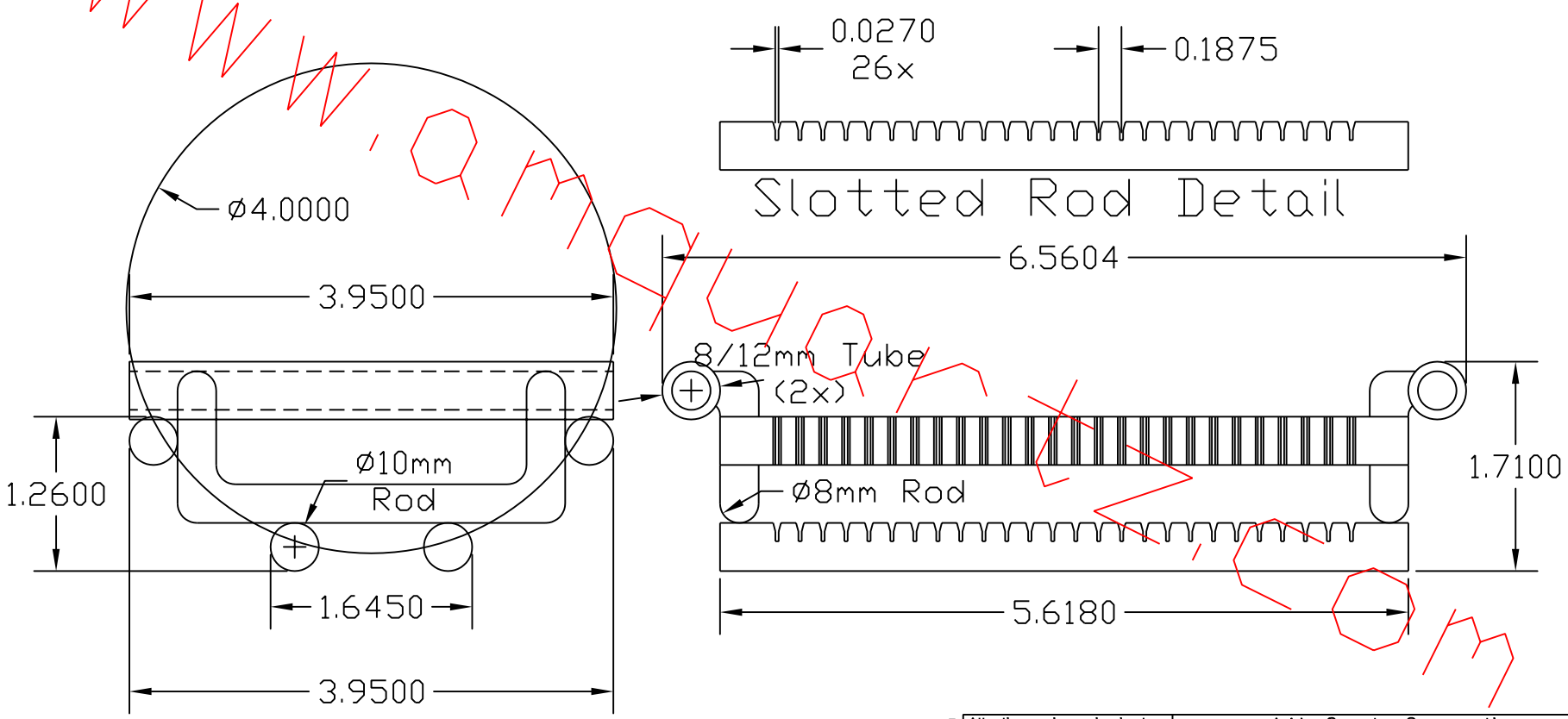

www.amquartz.com

All dimensions in inches unless otherwise noted.

A.M. Quartz Corporation
2400 Alabama Dr. Gainesville, TX 76240
Tel:(940)612-1011 Fax:(940)612-1014

4" 26 Slot Boat

Drawn By	SIZE	DWG NO.	REV
Material Semiconductor Grade Quartz		155A	
	Scale	Date	Sheet

www.amquartz.com