REVISIONS				
ZONE	REV	DESCRIPTION	Date	APPROVED

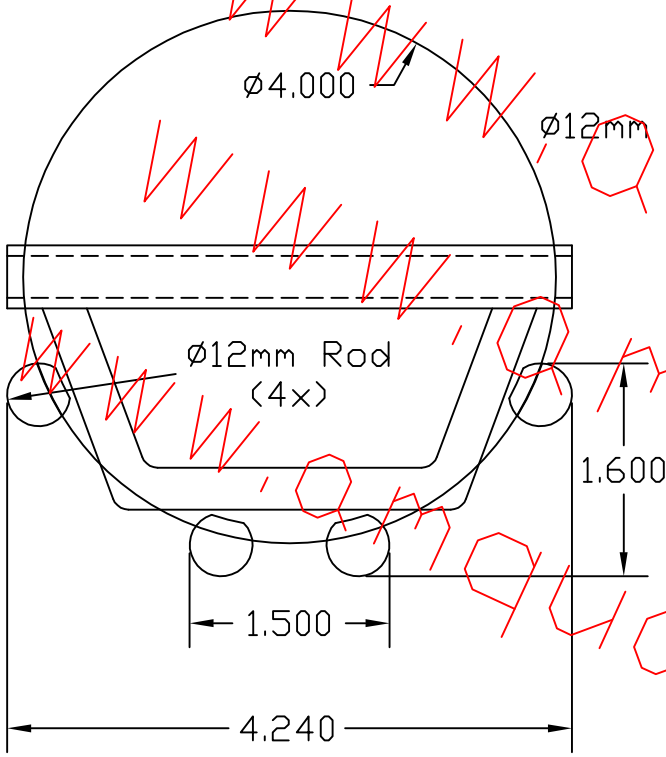

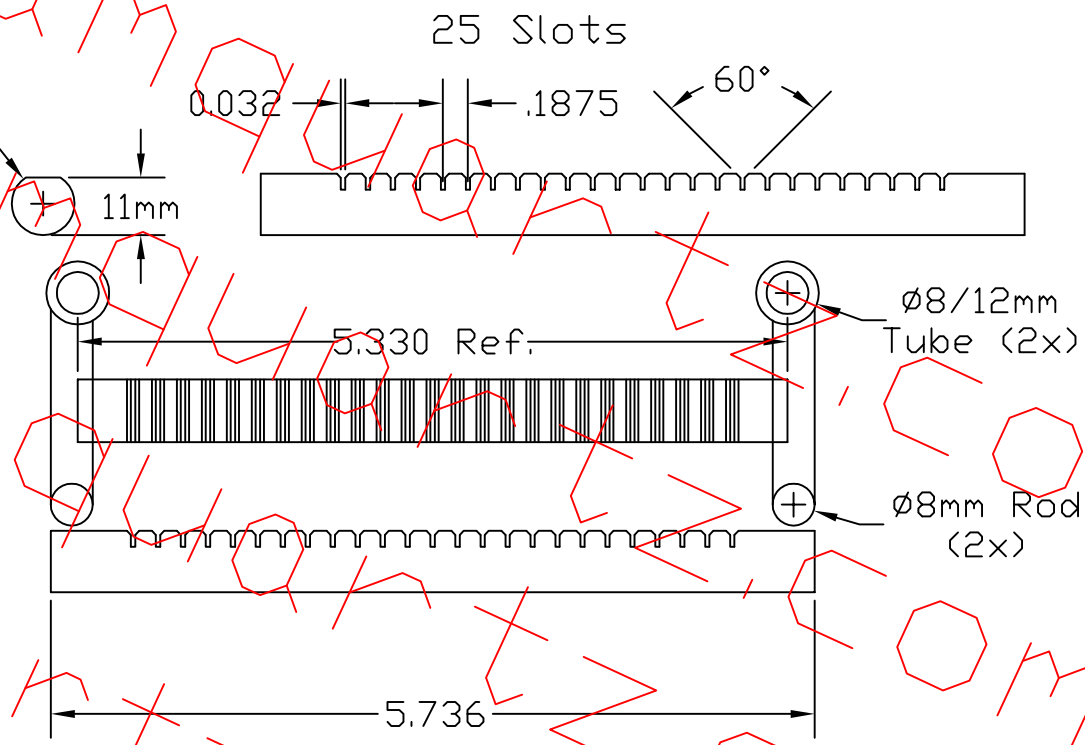

All dimensions in inches unless otherwise noted.

A.M. Quartz Corporation
2400 Alabama Dr. Gainesville, TX 76240
Tel:(940)612-1011 Fax:(940)612-1014

4" 25 Slot Boat

Drawn By	I. Gonzalez	SIZE	DWG NO.	REV
		Scale	Date 5/17/99	Sheet

www.amquartz.com